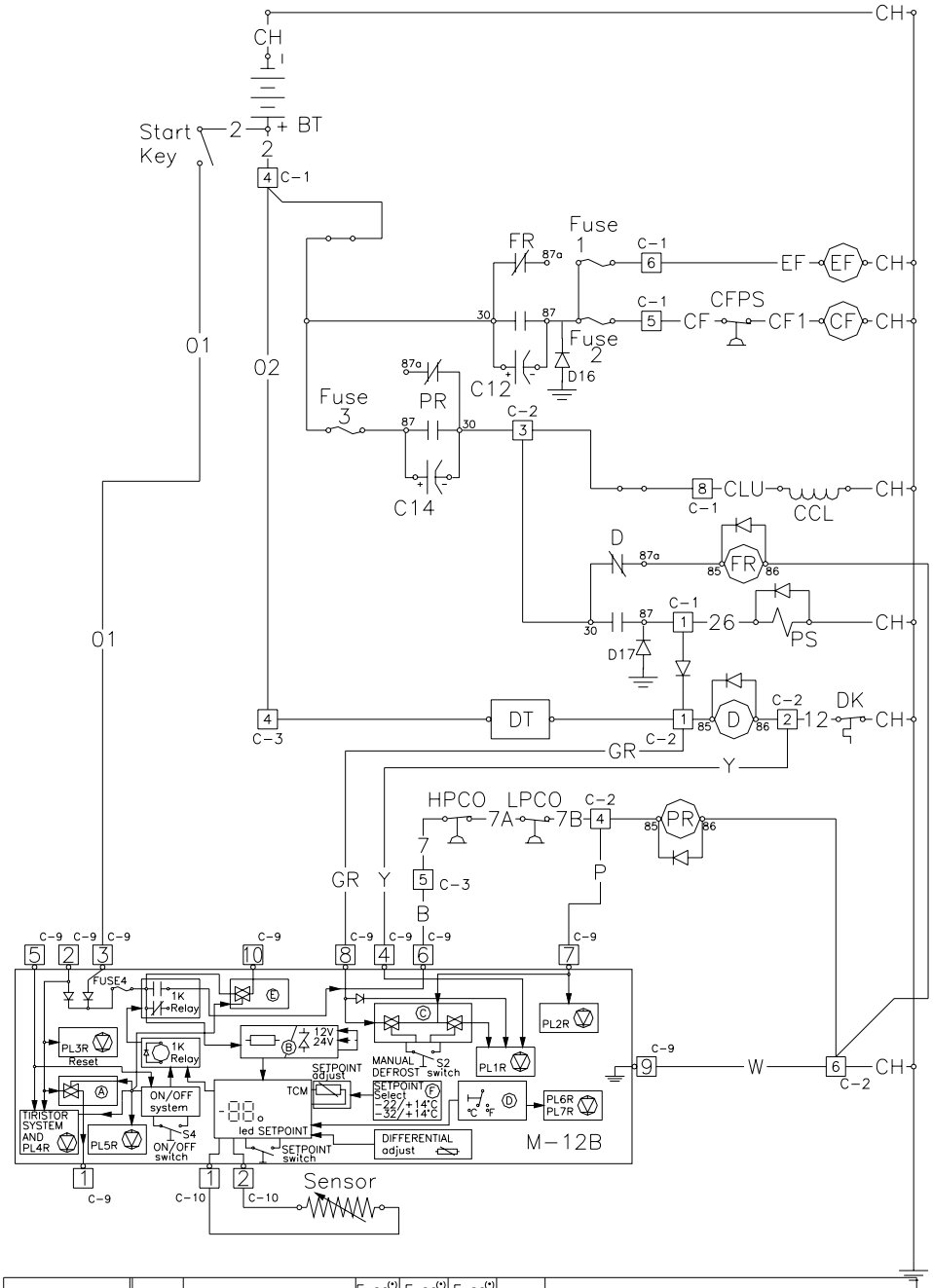

IDENT.	LEGEND	AREA
A BLOCK	ELECTRONIC SWITCH	16
B BLOCK	VOLTAGE SELECT	15
BT	BATTERY	5
C BLOCK	ELECTRONIC SWITCH	15
C3	CAPACITOR	8
CCL	COMPRESSOR CLUTCH	9
CF	CONDENSER FAN MOTOR	8
CFPS	COND. FAN PRESS SWITCH	8
D BLOCK	gC,gF SWITCH	16
D	DEFROST RELAY	10,12
DK	DEFROST TEMP. THERMOSTAT	12
DT	DEFROST TIMER	12
EF	EVAPORATOR FAN MOTOR	7
FR	FAN MOTOR RELAY	7,8,10
FUSE	CURRENT LIMITER:	
	-3/1	9
	-3/2	8
	-3/3	7
	-4	15
HPCO	HIGH PRESSURE CUTOUT SWITCH	13
1K	THERMOSTAT RELAY	15
LPCO	LOW PRESSURE CUTOUT SWITCH	13
M-12B	CAB CONTROL BOX	15,16
PCB	PRINT CIRCUIT BOARD PE-8.2	5,17
PL	PILOT LIGHTS:	
	-1R DEFROST LED	15
	-2R ON LED	15
	-5R ON MEMBRANE SWITCH LED	16
	-6R gC LED	16
	-7R gF LED	16
PR	POWER RELAY	8,9,13
PS	PILOT SOLENOID	11
S2	MANUAL DEFROST MEMBRANE SWITCH	15
S4	ON-OFF MEMBRANE SW.	16
TCM	TEMPERATURE CONTROL MODULE:	
	-DIFERENTIAL ADJUST	16
	-SETPOINT ADJUST	15
	-SETPOINT LED	16

Wire Cab Box		Power	Capacitor	Fuse(*) 3	Fuse(*) 2	Fuse(*) 1
			C12,C14(*)			
O1, O2	orange	12V	47µF 63V	10A	15A	15A
Y	yellow					
B	blue	24V	47µF 100V	5A	10A	10A
P	purple					
GR	grey					
W	white					

(*) ON PRINTED CIRCUIT BOARD

ITEM	PART NUMBER	REV.	DESCRIPTION	QTY.	MAT'L SPEC'S
			LIST OF MATERIAL		

THERMO KING SPAIN

Ref. 95.45.340

SCHEMATIC DIAGRAM
V-090
12V; 24V

SHEET 1 OF 1

DRAWN MANEL R. 15/3/94
CHECKED PASCAL R. 16/3/94
APPROVED A. MERCE 16/3/94

THIS PRINT SUPERSEDES ANY OF EARLIER DATE. DESTROY SAME.

MATERIAL:
FINISH:
SCALE

DRAWING NUMBER 95.45.341
REV. E

THIS DOCUMENT CONTAINS PROPRIETARY INFORMATION OF THE THERMO KING CORPORATION. IT IS TRANSMITTED TO YOU IN CONFIDENCE AND TRUST, AND IS TO BE RETURNED UPON REQUEST. ITS CONTENTS MAY NOT BE DISCLOSED IN WHOLE OR IN PART TO OTHERS OR USED FOR OTHER THAN THE PURPOSE FOR WHICH TRANSMITTED WITHOUT THE PRIOR WRITTEN PERMISSION OF THERMO KING CORPORATION.

REVISIONS			
A	207	15.03.94	RELEASED
B	521	27.04.95	CHANGE M-9 BY BOX M-12.
C	739	11.03.96	CHANGE M-12 BY BOX M-12A.
D	829	03.07.96	CHANGE M-12A BY BOX M-12B.
E	1910	01.07.99	RENAME FUSES ADD C12,C14 ADD D16,D17