REVISIONS						
CHANGE ORDER	SYM	DESCRIPTION	DATE	BY	CHD	APP
67204	A	RELEASED	1-12-96	JAN	[illegible]	RH

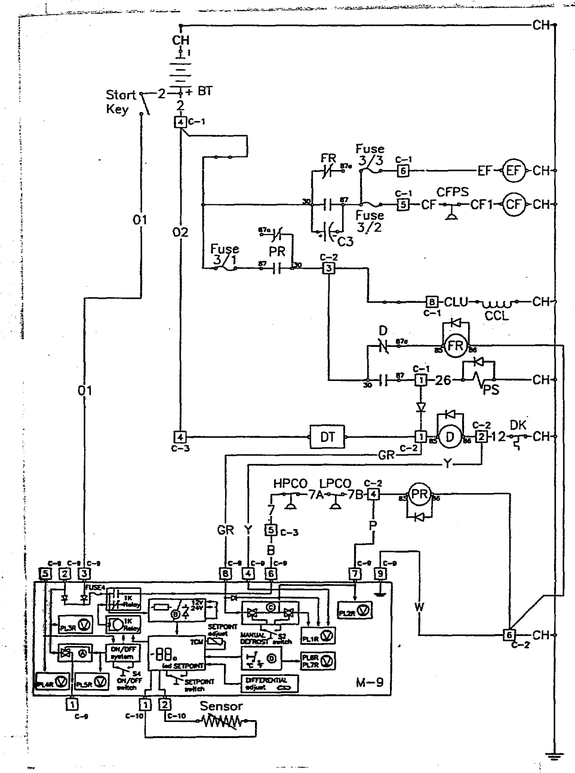

IDENT.	LEGEND	AREA
A BLOCK	ELECTRONIC SWITCH	16
B BLOCK	VOLTAGE SELECT	15
BT	BATTERY	5
C BLOCK	ELECTRONIC SWITCH	15
C3	CAPACITOR	8
CCL	COMPRESSOR CLUTCH	9
CF	CONDENSER FAN MOTOR	8
CFPS	COND. FAN PRESS SWITCH	8
D BLOCK	C,F SWITCH	16
D	DEFROST RELAY	10,12
DK	DEFROST TEMP. THERMOSTAT	12
DT	DEFROST TIMER	12
EF	EVAPORATOR FAN MOTOR	7
FR	FAN MOTOR RELAY	7,8,10
FUSE	CURRENT LIMITER:	
	-3/1	9
	-3/2	8
	-3/3	7
	-4	15
HPCO	HIGH PRESSURE CUTOUT SWITCH	13
1K	THERMOSTAT RELAY	15
LPCO	LOW PRESSURE CUTOUT SWITCH	13
M-9	CAB CONTROL BOX	15,16
PL	PILOT LIGHTS:	
	-1R DEFROST LED	15
	-2R ON LED	15
	-5R ON MEMBRANE SWITCH LED	16
	-6R C LED	16
	-7R F LED	16
PR	POWER RELAY	8,9,13
PS	PILOT SOLENOID	11
S2	MANUAL DEFROST MEMBRANE SWITCH	15
S4	ON-OFF MEMBRANE SW.	16
TCM	TEMPERATURE CONTROL MODULE:	
	-DIFERENTIAL ADJUST	16
	-SETPOINT ADJUST	15
	-SETPOINT LED	16

THERMO KING PROPRIETARY DATA

THIS DOCUMENT CONTAINS PROPRIETARY INFORMATION OF THE THERMO KING CORPORATION. IT IS TRANSMITTED TO YOU IN CONFIDENCE AND TRUST, AND IS TO BE RETURNED UPON REQUEST. ITS CONTENTS MAY NOT BE DISCLOSED IN WHOLE OR IN PART TO OTHERS OR USED FOR OTHER THAN THE PURPOSE FOR WHICH TRANSMITTED WITHOUT THE PRIOR WRITTEN PERMISSION OF THERMO KING CORPORATION.

© THERMO KING CORPORATION

FOR TOLERANCES NOT SPECIFIED SEE: TKSO. -109 TKS11-131

THIRD ANGLE PROJECTION

LIMITS NOT ACCUMULATIVE OVER A CONTINUOUS LINE OF DIMENSIONS

DRAWING CONFORMS TO ANSI Y14.5M-1982

DESIGN DIMENSIONS ARE IN INCHES DIMENSIONS IN □ ARE MILLIMETRE EQUIVALENT

FINISH: NONE

DRAWN	MTNELSON	DATE 10/30/95
CHECKED	MTNelson	22Jan96
APPROVED	R.Hegner	1/24/96
APPROVED		

THIS PRINT SUPERSEDES ANY OF EARLIER DATE DESTROY SAME

DIAGRAM SCHEMATIC 12V 24V V090

SCALE NONE SHEET OF 1

THERMO KING CORPORATION MINNEAPOLIS, MINNESOTA USA

REF TRANS 95.45.341

DRAWING NUMBER	REV
5D46822	A

10/30/95 15:54