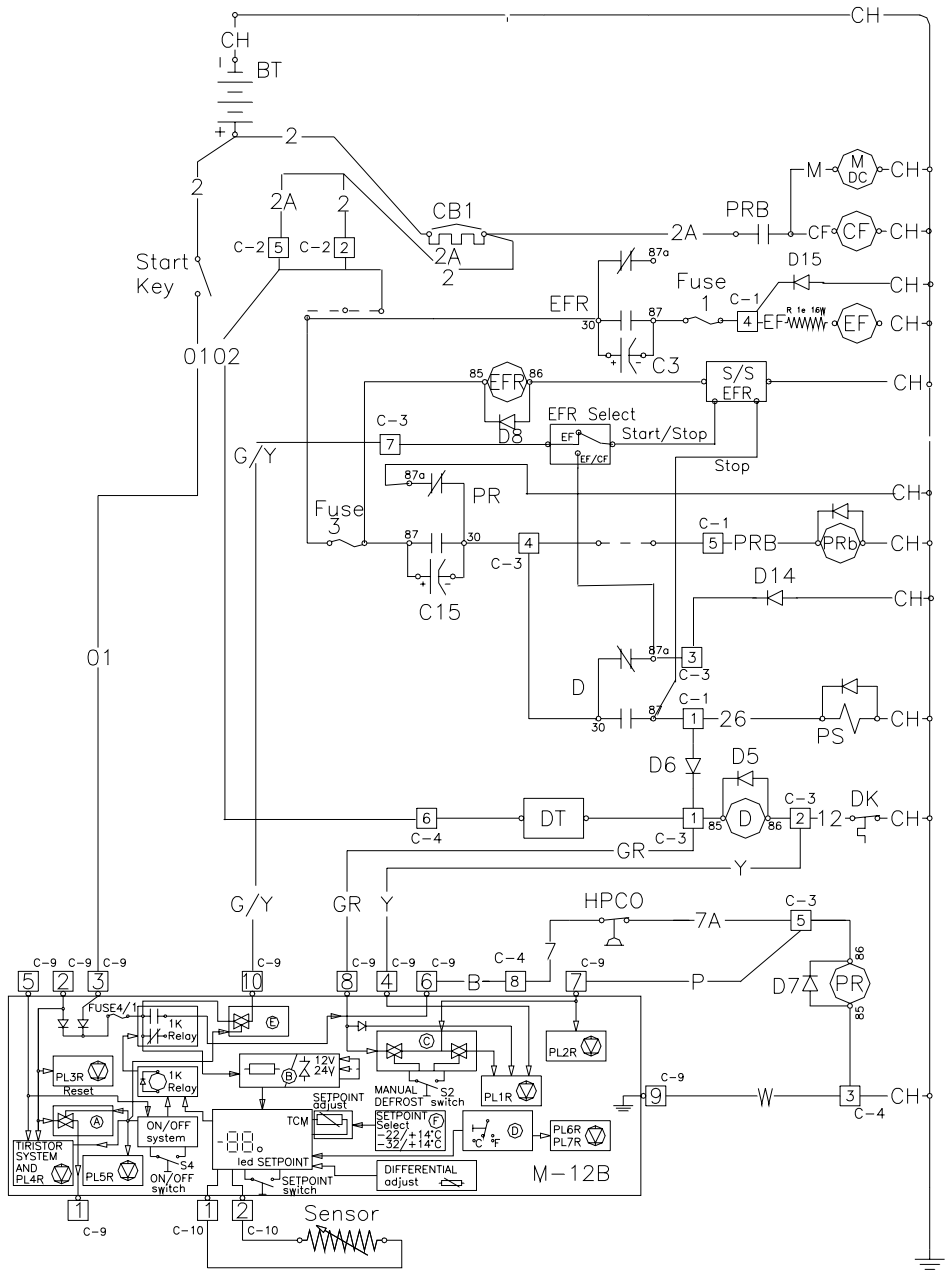

IDENT.	LEGEND	AREA
A BLOCK	ELECTRONIC SWITCH	16
B BLOCK	VOLTAGE SELECT	15
BT	BATTERY	5
C BLOCK	ELECTRONIC SWITCH	15
C3,C15	CAPACITOR	8
CB1	CIRCUIT BREAKER	5,6
CF	CONDENSER FAN MOTOR	8
D BLOCK	°C,°F SWITCH	16
D	DEFROST RELAY	11,12
DK	DEFROST TEMP. THERMOSTAT	12
DT	DEFROST TIMER	12
DIODES PROTECTION:		
	-D8,D15	8,7
	-D5,D6,D14	12,10
	-D7,D9	14
EF	EVAPORATOR FAN MOTOR	7
EFR	EVAPORATOR FAN RELAY	7,8
		3
FUSE	CURRENT LIMITER:	7
	-3	9
	-1	7
	-4/1	15
HPCO	HIGH PRESSURE CUTOUT SWITCH	13
1K	THERMOSTAT RELAY	15
M12B	CAB CONTROL BOX	15,16
MDC	MOTOR DC	7,15
PCB	PRINT CIRCUIT BOARD PE9.2	6
PL	PILOT LIGHTS:	
	-1R DEFROST LED	15
	-2R ON LED	15
	-3R POWER CORN LED	15
	-4R OVERLOAD LED	15
	-5R ON MEMBRANE SWITCH LED	16
	-6R °C LED	16
	-7R °F LED	16
PR	POWER RELAY	8,9,13
PRB	POWER REPAY BATERY	11
PS	PILOT SOLENOID	6,10
S2	MANUAL DEFROST MEMBRANE SWITCH	15
S4	ON-OFF MEMBRANE SW.	16
TCM	TEMPERATURE CONTROL MODULE:	
	-DIFERENTIAL ADJUST	16
	-SETPOINT ADJUST	15
	-SETPOINT LED	16

Wire Cab Box		Power	Capacitor		CB1		Fuse(*) 3		Fuse(*) 1	Fuse(*) 4/1
BR	brown			(*) C3,C15						
R	red									
01,02	orange	12V		47 ŒF 100V	80A		10A		15A	1A
Y	yellow									
G	green									
B	blue	24V		47 ŒF 100V	60A		5A		10A	1A
P	purple									
GR	grey									
W	white									
G/Y	gr/ye									

(*) ON PRINTED CIRCUIT BOARD OR CAB BOX

ITEM	PART NUMBER	REV.	DESCRIPTION	QTY.	MAT'L SPEC'S
			LIST OF MATERIAL		

THERMO KING SPAIN

Ref. 95.45.570

SCHEMATIC DIAGRAM
B-080
12V; 24V

SHEET 1 OF 1

DRAWN A. MERCE 29.10.96
CHECKED LORENZO 31.10.96
APPROVED A. MERCE 29.10.96

THIS PRINT SUPERSEDES ANY OF EARLIER DATE. DESTROY SAME.

MATERIAL:
FINISH:
SCALE

DRAWING NUMBER 95.45.571
REV. E

THIS DOCUMENT CONTAINS PROPRIETARY INFORMATION OF THE THERMO KING CORPORATION. IT IS TRANSMITTED TO YOU IN CONFIDENCE AND TRUST, AND IS TO BE RETURNED UPON REQUEST. ITS CONTENTS MAY NOT BE DISCLOSED IN WHOLE OR IN PART TO OTHERS OR USED FOR OTHER THAN THE PURPOSE FOR WHICH TRANSMITTED WITHOUT THE PRIOR WRITTEN PERMISSION OF THERMO KING CORPORATION.

REVISIONS

A	893	29.10.96
	RELEASED	
B	1065	07.04.97
	CHANGE CB1 OF 40 TO 60 AMPS. FOR 24V.	
C	1503	01.06.98
	ADD R1 16W	
D	1972	09.08.99
	RENAME FUSES,WAS 3/1, 3/3, IS FUSE 3, FUSE 1. ADD IN PCB D17,D16	
E	2168 MN	20.01.00 LC
	CHANGE PCB PE9.2 (WAS PE 8)	